weinor

EYE-CATCHER

weinor VertiTex II vertical awning



Only from weinor:

The smallest cassette

Cassette height 7.5 cm even up to 6 m width

Awarded with:
GERMAN DESIGN AWARD SPECIAL 2019



VertiTex II –
enjoy the outdoors well protected

The VertiTex II vertical awning **offers protection from the dazzling sun, prevents the patio and indoors from becoming uncomfortably hot and shelters you from prying eyes.** Carpets/flooring, curtains and furniture are also protected. This textile beauty still lets you see outside too, depending on the fabric type. Large windows can also be shaded with VertiTex II. And the extremely small cassette adapts unobtrusively to to any building facade.

VertiTex II Rail I **Frame colour** WT 029/80081 I **Pattern** StarScreen 7-103 sand



VertiTex II Zip | **Frame colour** WT 029/80081

Protected patio
The weinor vertical awning can be flexibly and subtly mounted on the patio roof thus providing reliable all-round protection, even with a low-lying sun and wind.



VertiTex II Rope | **Frame colour** WT 029/80081

More beautiful living on balconies
VertiTex II can be used as an attractive and stable alternative to sunshades etc. on the balcony.



I **Pattern** StarScreen 7-103 sand

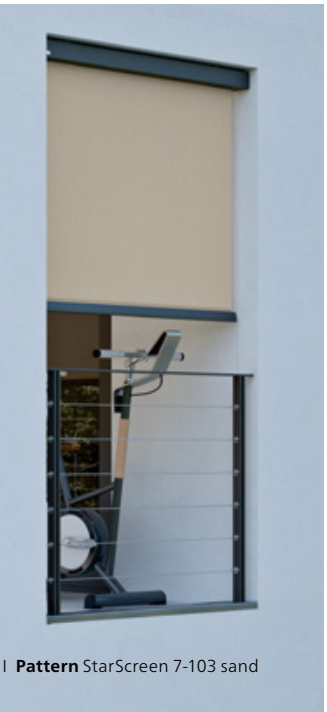

I **Pattern** StarScreen 7-103 sand

The right choice **for anywhere**

Regardless of whether it's for the patio roof, pergola awning, window, balcony or conservatory: the VertiTex II is always perfect. Thanks to its compact design, the many versions offer versatile protection against prying eyes and the weather, it is a **real all-rounder among vertical awnings.** And its unobtrusive design gives a great look to any facade in any application.



VertiTex II Rail I **Frame colour** WT 029/80081 I **Pattern** StarScreen 7-103 sand

Textile luxury at the window

Due to its impressive textile, homely character, the VertiTex II is a suitable alternative to external shading systems or roller shutters. Its huge advantage: it can be used outside and inside. Special fabric types also allow for pleasant lighting inside thanks to their transparency and allow you to see outside at the same time as offering privacy protection.

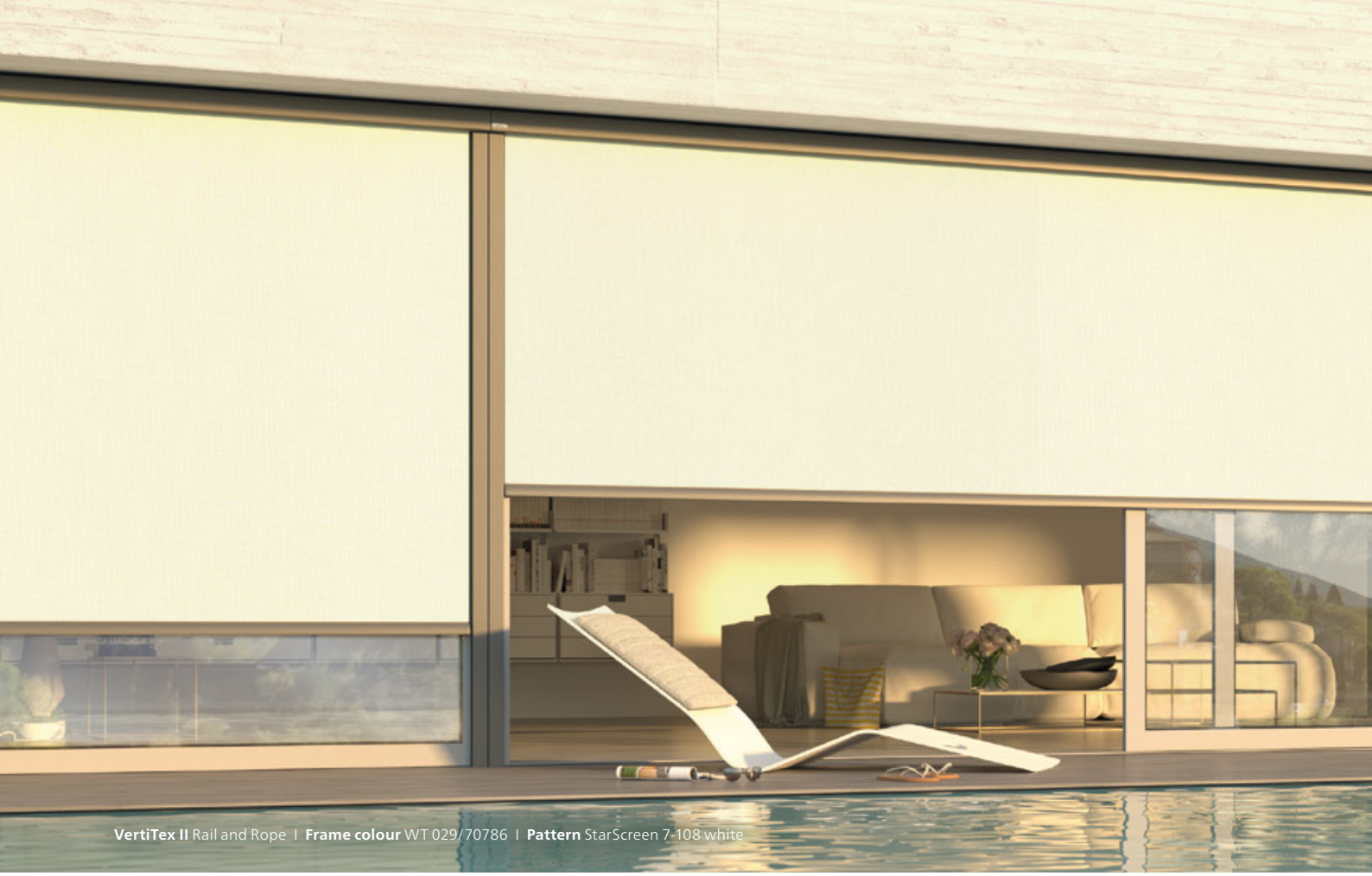

VertiTex II Rail and Rope I **Frame colour** WT 029/70786 I **Pattern** StarScreen 7-108 white

Small size – great design

We don't want you to deface your patio, windows or balcony with a bulky cassette housing. Which is why we have developed the smallest cassette for you. **Thanks to the patented weinor Opti-Flow-System® the cassette is much smaller and more discreet –** even with very large fabrics up to 6 metres wide. And the fabric position is always perfect.

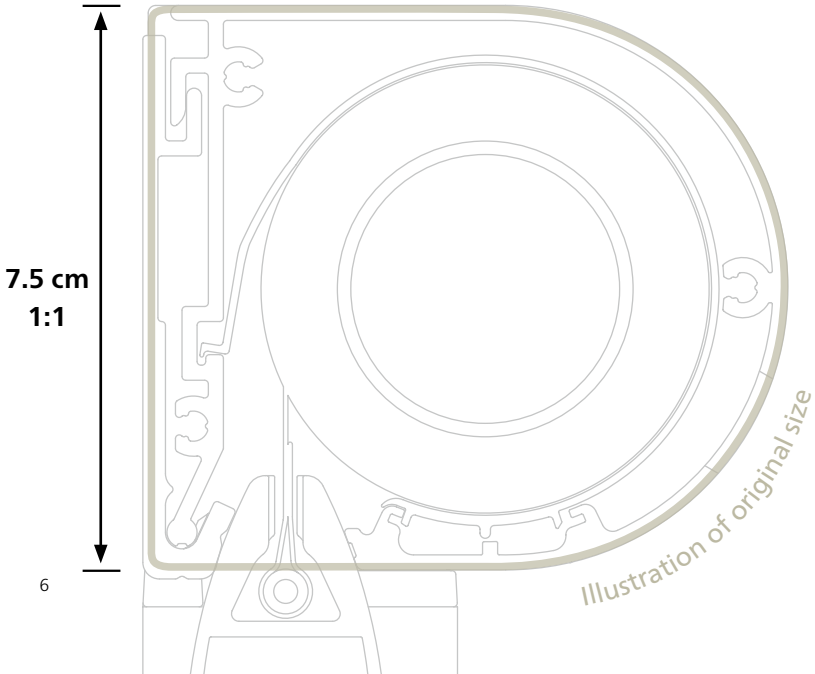

Our smallest*: just 7.5 cm high!
weinor is the only manufacturer to offer widths of up to 6 metres with the smallest cassette detail.

* For the rail and rope versions both in round and also square cassette shape. Besides this, there is also a 9.2 cm high cassette available.







A gem – available in round or square design

Do you prefer classically round or timelessly square? VertiTex II is sure to suit your taste. As the gem is available in round and square design **as well as having no visible fixings on display.** As a result, you can really easily adapt the weinor vertical awning to any building style. And with more than 200 frame colours and fabric patterns you are sure to strike the right note!



Frame colour WT 029/80081 I **Pattern** StarScreen 7-103 sand

Three versions – always beautiful, always fitting

Every facade or patio has its own special characteristics – in terms of appearance but also with regard to the location and construction. Which is why weinor offers three different techniques to reliably guide the fabric sideways: by zip, rail and rope. **All three versions can also be made in large widths up to 6 metres** and are suitable for a whole variety of uses.

VertiTex II Zip



The wind-resistant version
The fabric held captive on both sides. The benefits: very well tensioned fabric, no light gap and maximum wind stability.

VertiTex II Rail



The universal version
The fabric is reliably guided in the rail with the bottom rail profile. A small light gap remains between the fabric and rail.

VertiTex II Rope



The light version
The VertiTex II with rope guide is the ideal solution for a delicate and light look.



VertiTex II Rail I **Frame colour** WT 029/80081 I **Pattern** StarScreen 7-103 sand

Fits in well. Thanks to the matching guide rails, special fixing techniques and the small cassette shape, the VertiTex II can also be fitted to difficult facade areas, for example window frames or reveals.



VertiTex II Rail I **Frame colour** RAL 7016 I **Pattern** Soltis® 86-2044 white

Crystal-clear view. The small cassette and transparent fabric from inside allow for unobstructed views outside. The fabric dominates the look. Resulting in a homely atmosphere.

Stable in the wind. All three VertiTex II versions are wind-resistant. The benefit for you: if the wind's blowing a bit stronger, the privacy and sun protection doesn't have to be retracted straight away. The VertiTex II Zip has the highest wind-resistance due to the awning fabric's guide being completely closed. The fabric remains stable and withstands stress up to wind force 6.

WIND-RESISTANCE
up to WF 6
on the Beaufort scale





VertiTex II Rope I **Frame colour** RAL 7032 I **Pattern** Soltis® 86-2175 champagne

Hangs securely in the ropes. The VertiTex II rope guide can be indented, if required. This provides benefits if it is not possible to fix it on the sides, e.g. with indented posts or very narrow window frames. The awning fabric can then be wider than the guide rope bracket.

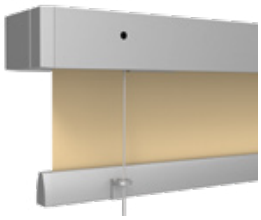

All lined up. Do you have windows that are wider than 6 metres? No problem! VertiTex II can also be used as a multi-section unit and can therefore be adapted perfectly to extremely large patio roofs or facade fronts.



VertiTex II Zip I **Frame colour** WT 029/80081 I **Pattern** StarScreen 7-108 white

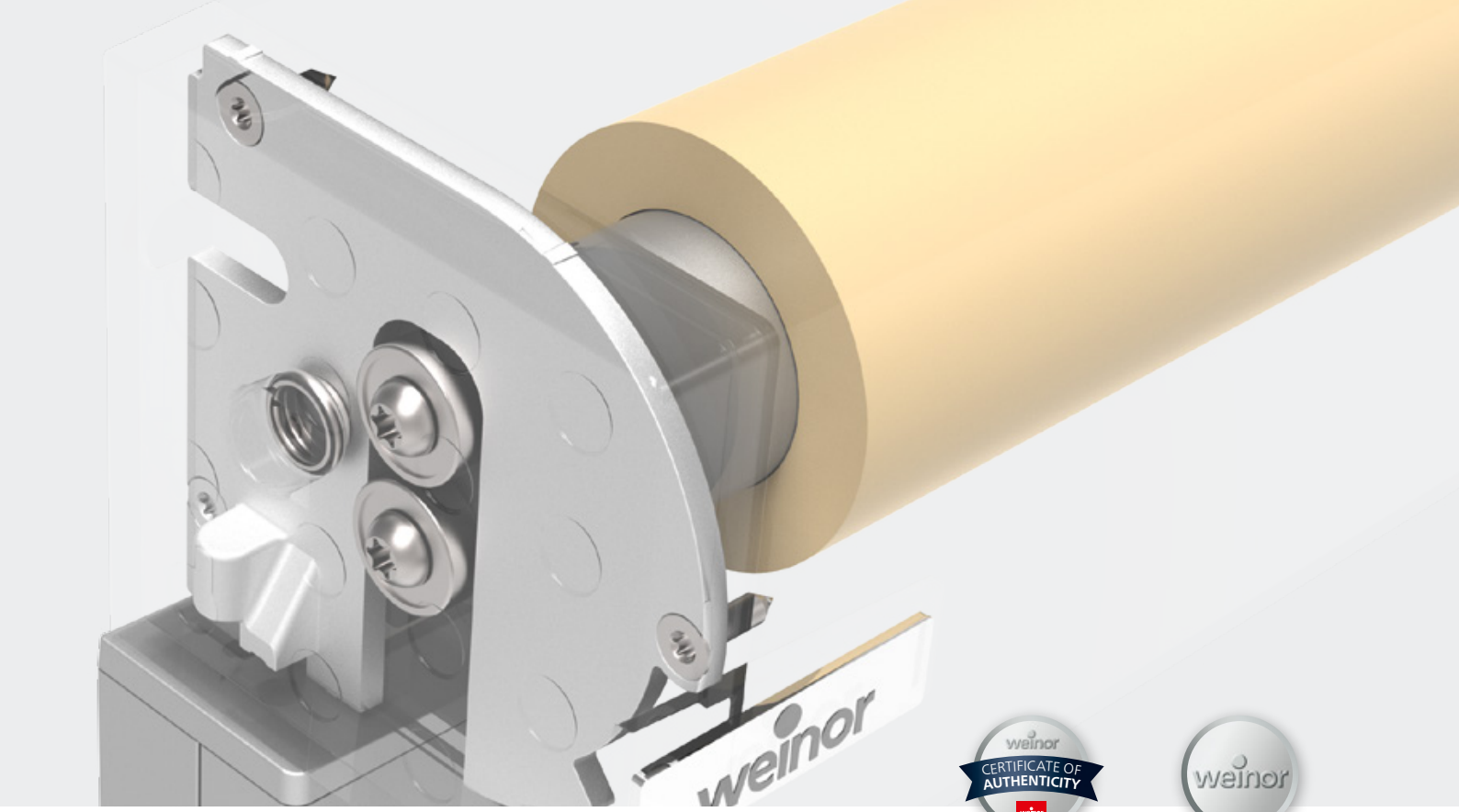

The innovative weinor Opti-Flow-System® makes large fabric widths possible.

Most definitely **an original product**

Premium quality made in Germany

Quality and comfort **made by weinor**

Anyone opting for weinor products can rely on top quality. Only high-quality materials are used. Thanks to our many years of experience and our own state-of-the-art production, the VertiTex II is perfectly tailored to your needs.

VertiTex II has been honoured with the **German Design Award 2019** in the Special Mention category for its modern, slimline design.

Awarded with:
GERMAN DESIGN AWARD SPECIAL 2019



VertiTex II: Good to know before you buy!

Benefit from the experience of our weinor retailers – up-to-date, professional, practical!

www.weinor.com/practical-advices-vertitex2

VertiTex II – technical highlights with zip, rail and rope

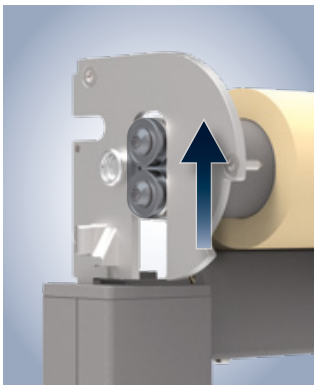

Wound up roller tube



Unrolled roller tube

Smallest cassette thanks to the weinor Opti-Flow-System®

The small roller tube for the VertiTex II has a floating bearing. This yields when the fabric is wound up and is therefore safely supported across the entire width of the awning. As a result, the tube cannot bow under the load and **the fabric position is always optimised.** Very large fabric surface areas up to 15 m^2 can therefore be produced without the cassette size having to be modified.

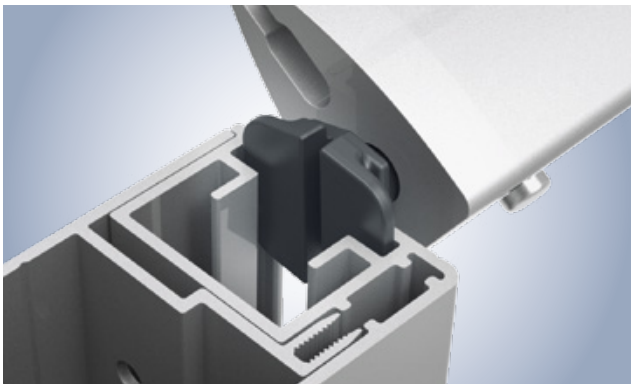

Safely guided – even in winds

In winds the elegant bottom rail profile at the bottom of the awning revolves too so that the system runs **reliably and quietly** without jamming. This protects the fabric and mechanism and extends the operating life of the whole system.



Exterior view



Interior view

Readily retrofittable

VertiTex II can be really easily retrofitted on windows, patio roofs or balconies too. Narrow frames or complex untrussed roofs do not pose any problems. The weinor vertical awning can be **used almost anywhere.**

weinor product control options



Further information is available under www.weinor.com/control.

weinor BiConnect

Smart Home Ready

The right control unit to suit all needs

Whether hard wired, remote control or Smart Home, using a hand transmitter, smartphone or an automatic weather system – a wide range of control options ‘are available for the operation of weinor awnings and accessories, from weinor BiConnect or Somfy. Simply choose the appropriate control package Basic, Comfort or Smart. LED lighting and the heating system for your patio can be dimmed fine-tuned using remote controls or Smart Home. Your weinor retailer is happy to advise you competently.

Please note that the systems BiConnect and Somfy available from weinor cannot be combined.

The **fabric** makes the awning

Breathtakingly beautiful and long-lasting: Our wide range of fabric patterns brings a cosy atmosphere outdoors – uniquely and specifically suited to your individual style and taste.

Attractive awning fabrics to suit every taste



The exquisite my collections 2 fabrics captivate with exciting, new weaving effects, state-of-the-art colouring as well as 12 exclusive patterns – for modern outdoor living or the classical home style.

modern basics blue®
The first sustainable awning fabrics designed by weinor were accoladed alone with 7 design and sustainability prizes. We have now expanded them as a collection – for everyone who really cares about the future.

ever**more**
Innovative patterns with novel structures provide timeless, harmonious fabrics in beige and grey with an individual touch. With new interpretations of the trend topic grey, fans of classical colours absolutely get their money's worth.

hi **hello!**
Colourful fabrics with innovative weaving accents provide your outdoor living space with vitality and joy with their sunny atmosphere. If you like to provide strong colour accentuation with your awning fabric, you can find a wide selection of lively patterns here.

Vertical sun protection fabrics with a crystal-clear view



weinor vertical awnings reliably protect the patio and indoor rooms against overheating and your privacy against prying eyes. We recommend the screens by weinor® collection for this application.

It encompasses three different,high-quality fabrics: StarScreen, Soltis® and fibreglass screen. They all offer perfect sun protection and privacy for windows, the patio and balconies. Different degrees of transparency and to how much air is let through are possible, depending on requirements.

Note: Soltis® fabrics are not available for VertiTex II Zip.

You can find further manufacturers' information for our awning fabrics and the Industrieverband Technische Textilien, Rollladen, Sonnenschutz [Industrial Association for Technical Textiles, Roller Shutters and Sun Protection] (ITRS e.V.) under: **www.weinor.com/fabric_qualities**

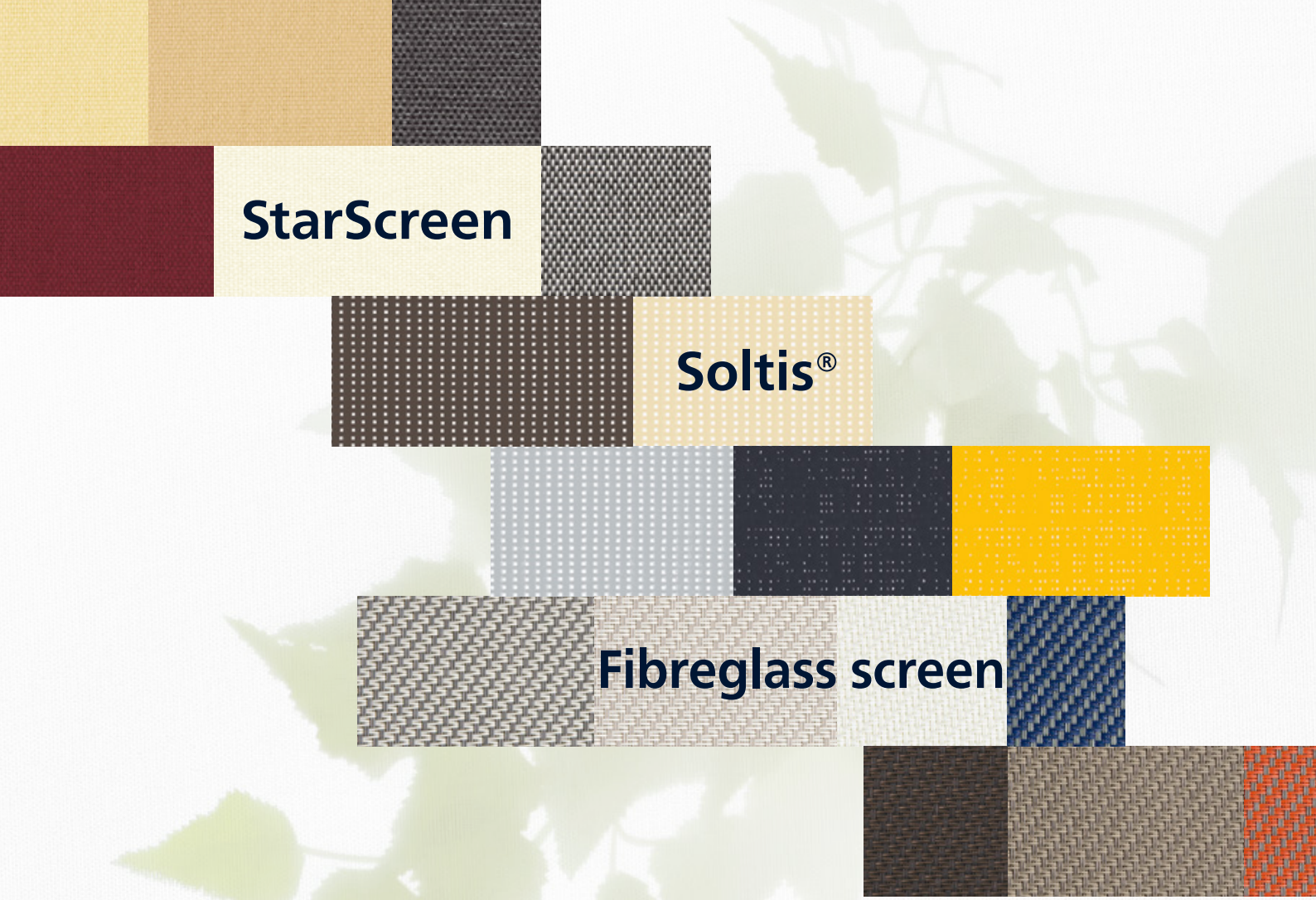

screens by weinor® is the fabric collection for vertical privacy and sun protection at home. The beautiful fabrics provide a pleasant climate and make it more homely.

screens by weinor®

47 standard RAL colours

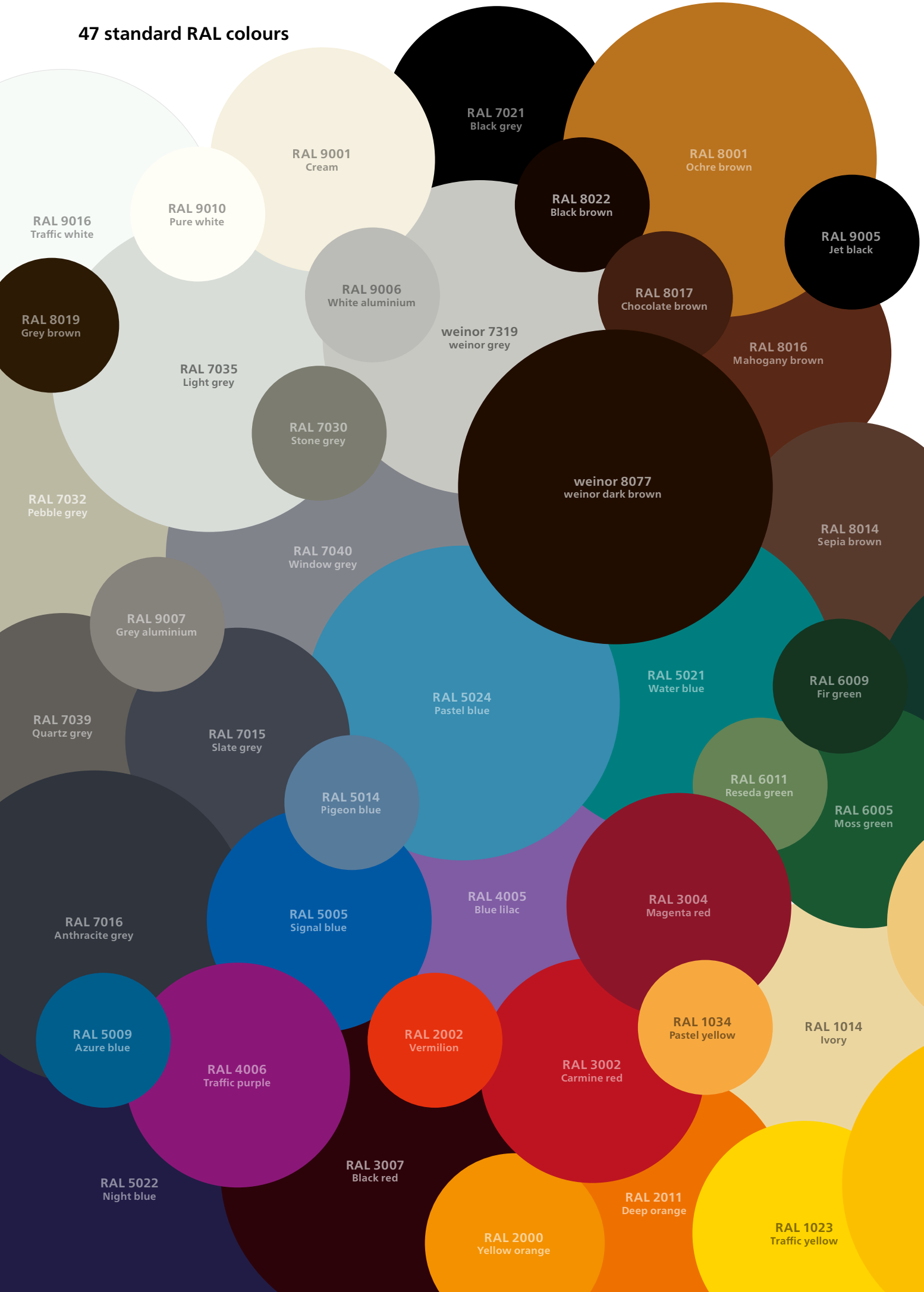

Over 200 modern **frame colours**

Colour manufacturers make every effort to guarantee colour stability. Despite this, as a result of the ban on the use of heavy metals in powder coatings, it therefore cannot be excluded that colours in general, and Fire Red (RAL 3000) in particular, may fade with time. Colours may differ significantly due to the printing process.

Maximum colour safety: weinor has over 200 different frame colours for you to choose from. You can choose from diverse colours which harmonise with the architecture.

Identical colours – for a perfect match
As weinor does all the powder coating in its own workshop, you can also rest assured that different weinor products come with the same top-class colour tonality and identical gloss level.

Choose from an abundance of high-quality colours:
- 47 standard RAL rack colours, silk gloss
- 9 scratchproof, resistant trend colours with an elegant textured look (standard)
- over 150 special RAL colours

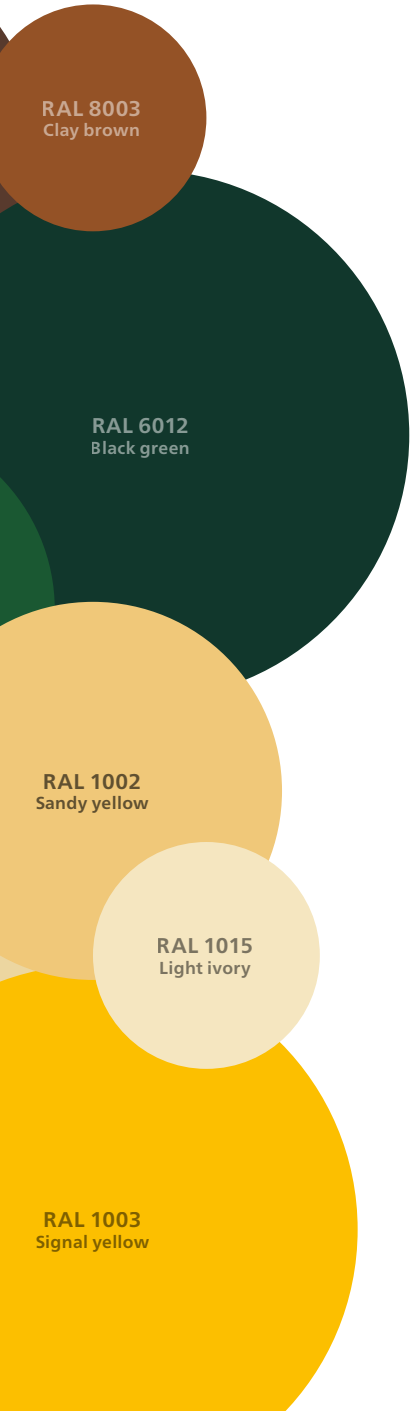

9 trend colours

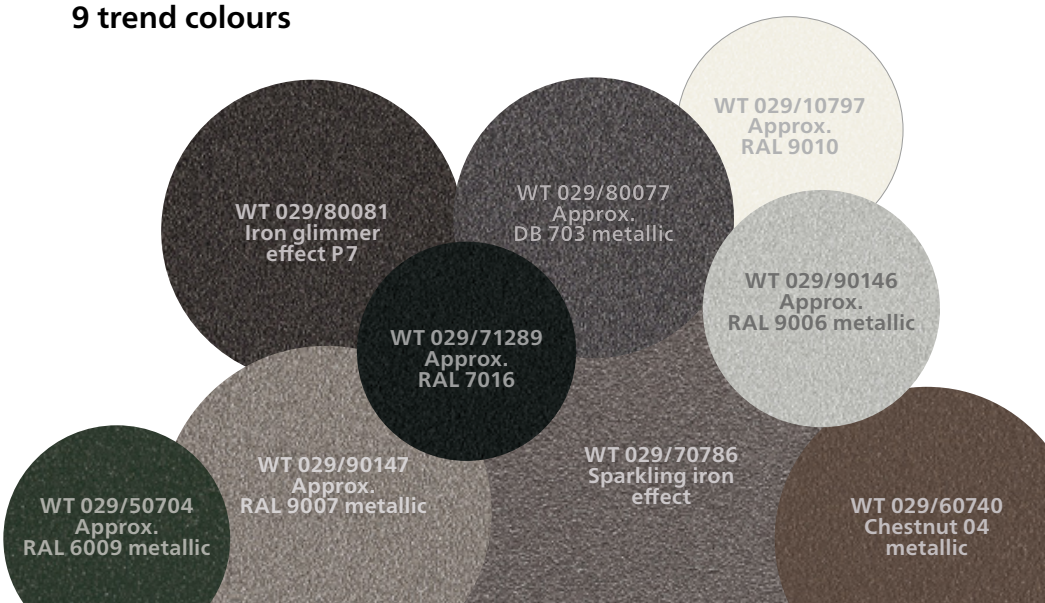

weinor **VertiTex II vertical awnings**
Product benefits in detail

● standard ○ option — unavailable

	Zip	Rail guide	Rope guide
Technology			
Max. width	600 cm	600 cm	600 cm
Max. height of system	300 cm	400 cm for max. width of 350 cm	400 cm for max. width of 350 cm
Max. shadeable area	15.0 m²	14.4 m²	14.4 m²
Cassette type 75 (86 x 75 mm)	—	system height up to 300 cm	system height up to 300 cm
Cassette type 92 (101 x 92 mm)	system height ● up to 250 cm	system height ○ up to 300 cm ● from 301 cm	system height ○ up to 300 cm ● from 301 cm
Cassette type 112 (121 X 112 mm)	system height ○ up to 300 cm	—	—
Multi-section unit	○	○	○
Motor drive	● as standard; no crank		
Wind resistance class according to DIN 13561 Wind force on the Beaufort scale (km/h)	3 6 (up to 49 km/h)	2 5 (up to 38 km/h)	2 5 (up to 38 km/h)
Control			
weinor BiConnect	○	○	○
Somfy io-homecontrol	○	○	○
Somfy RTS	○	○	○
Weather sensors	○	○	○
Frame colours			
47 standard frame colours	●	●	●
Over 150 special RAL colours	○	○	○
9 trend colours	●	●	●
Fabric collections (max. height of system dependent on the cassette type)			
screens by weinor® StarScreen	○ (300 cm)	○ (400 cm)	○ (400 cm)
screens by weinor® Soltis® 86/92*	—	● / ○ (400 cm)	● / ○ (400 cm)
screens by weinor® fibreglass screen**	○ (300 cm)	○ (300 cm)	○ (300 cm)
my collections 2	● (220 cm)	● (220 cm)	● (220 cm)

** Soltis® fabrics have a plastic surface that is washable and durable at the same time. However, this easy to clean surface produces static friction on the fabric, which partly leads to it not rolling up smoothly. This brief jerking movement does not impair the product's function and durability in any way.*
*** With VertiTex II with rail or rope guide, the fibreglass screen is not possible with a system width of 300 cm or more.*

Save energy costs with vertical awnings!

As exterior sun protection, VertiTex II prevents indoor rooms from overheating. This saves on costs for cooling and air-conditioning.

Important:
All the illustrated equipment is weatherproof outdoor furniture and accessories.

Fabric qualities: *weinor awning fabrics meet strict quality requirements and are produced using state-of-the-art production technology. Despite this, blemishes like creases, rippling in the seam and hem area, overstretching in the hem area and honeycombing cannot be ruled out. This has no negative impact on the quality and operating life and are not a reason for rejection. For more detailed information:* ***www.weinor.com/fabric_qualities***

Awnings and conservatory awnings: *must be retracted during rain and windy conditions – otherwise there is a risk of water pooling on the fabric. Fabrics that are allowed to become wet may show creasing, wrinkling or honeycombing as well as having visible water stains. Mould and mildew damage is also a possibility. If taken away wet the awning should be extended as soon as possible once there are dry conditions.*

Frame colours: *depending on the frame colour ordered, we deliver all small parts, as well as gear handles and gear boxes in black (similar to RAL 9005), white (similar to RAL 9016), or in grey (similar to weinor 7319).*

Motor drives: *Depending on the type of motor and control, the driving behavior may be slightly different (eg when running in the bottom rail).*

Perfectly housed

The different versions of cassette and guide always provide the perfect solution for any building situation. This is also evident in the following detail of building units including dimensioning (all details in mm).

Cassette round, small (86 x 75 mm)

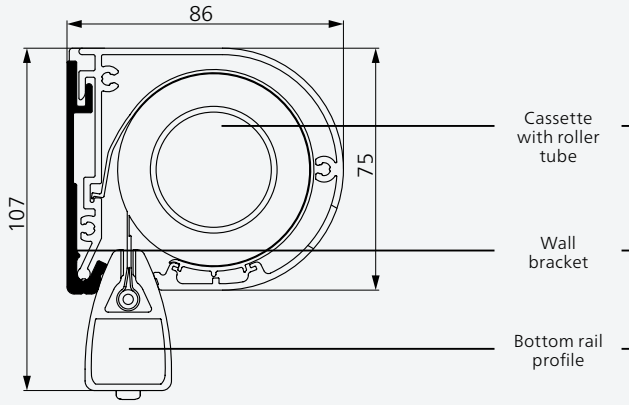

Cassette square, small (86 x 75 mm)

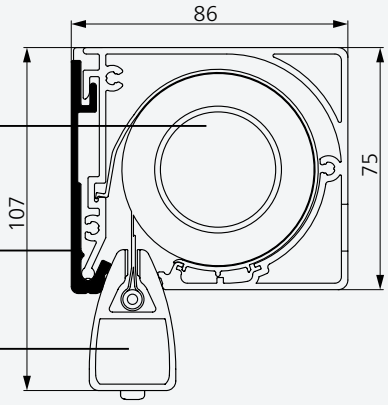

Cassette round, middle (101 x 92 mm)

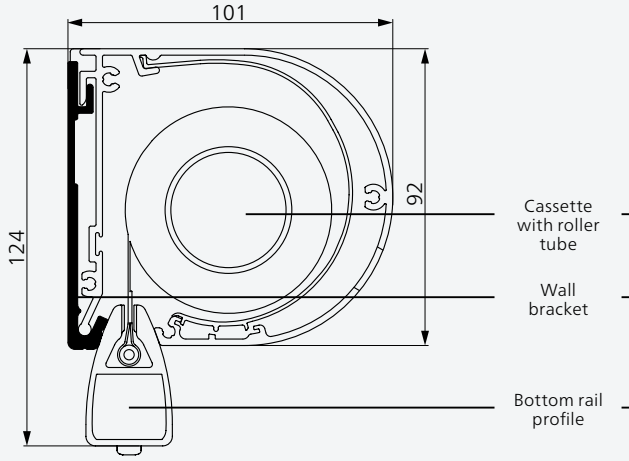

Cassette square, middle (101 x 92 mm)

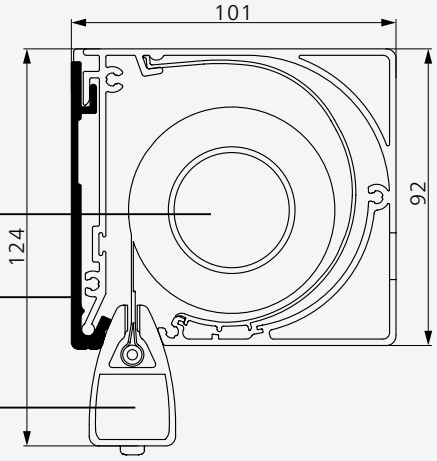

Cassette round, large (121 x 112 mm)

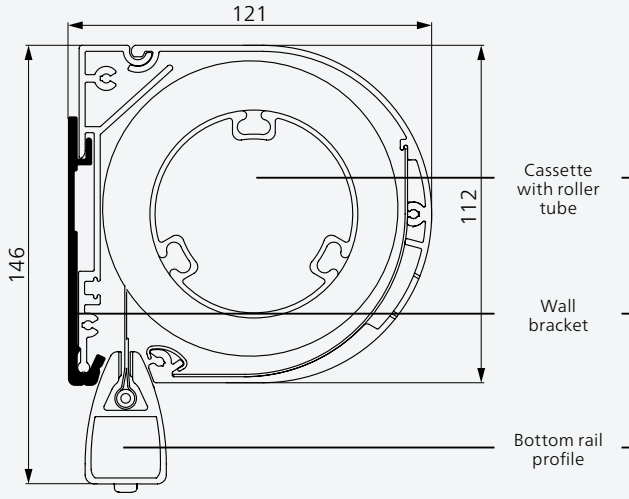

Cassette square, large (121 x 112 mm)

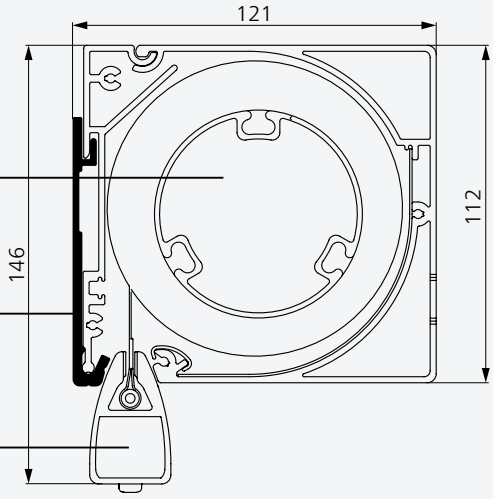

Round guide rail

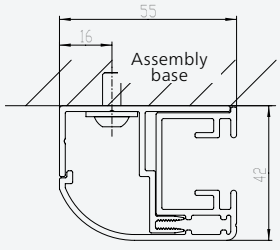

Wall mounting

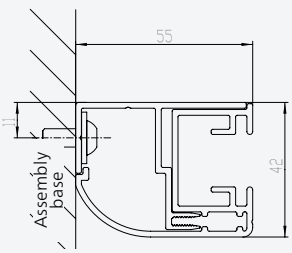

Installation in reveals

Square guide rail

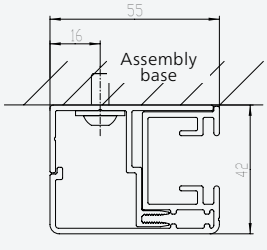

Wall mounting

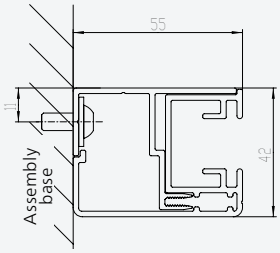

Installation in reveals

Awnings Patio roofs Glasoasen®

weinor



Cover
Front: **Frame colour** WT 029/80081 I **Pattern** StarScreen 7-103 sand
Back: **Frame colour** WT 029/70786 I **Pattern** 3-716 suede

We reserve the right to make technical changes as well as changes in range and product portfolio. The weinor product range may vary depending on the country. For technical reasons, the colours may appear slightly different when printed.

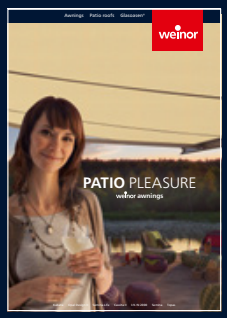





weinor 3D DESIGNER 2.0

Design your dream patio yourself!

www.weinor.com/3d-designer

Experience the whole weinor.com world

Your weinor retailer will be pleased to advise you:

Patent no

DE102011115536A1	DE102011120712A1
EP3339559A1	EP3741924A1
EP1835089A3	EP3392446B1
EP1382770A1	DE102010053774B4
DE102006059468A1	EP3246500A1
EP2019346B1	DE102007050522A1
EP3228801B1	DE102015012432A1
EP2383402A2	DE102011109525A1
EP1936105A3	EP3048213B1
EP1564364B1	DE202016007483U1
EP2202376A1	EP3392425B1
EP3450640B1	DE202006003917U1
EP1522650A3	

250/0124/129051-0000 w